加工精度	

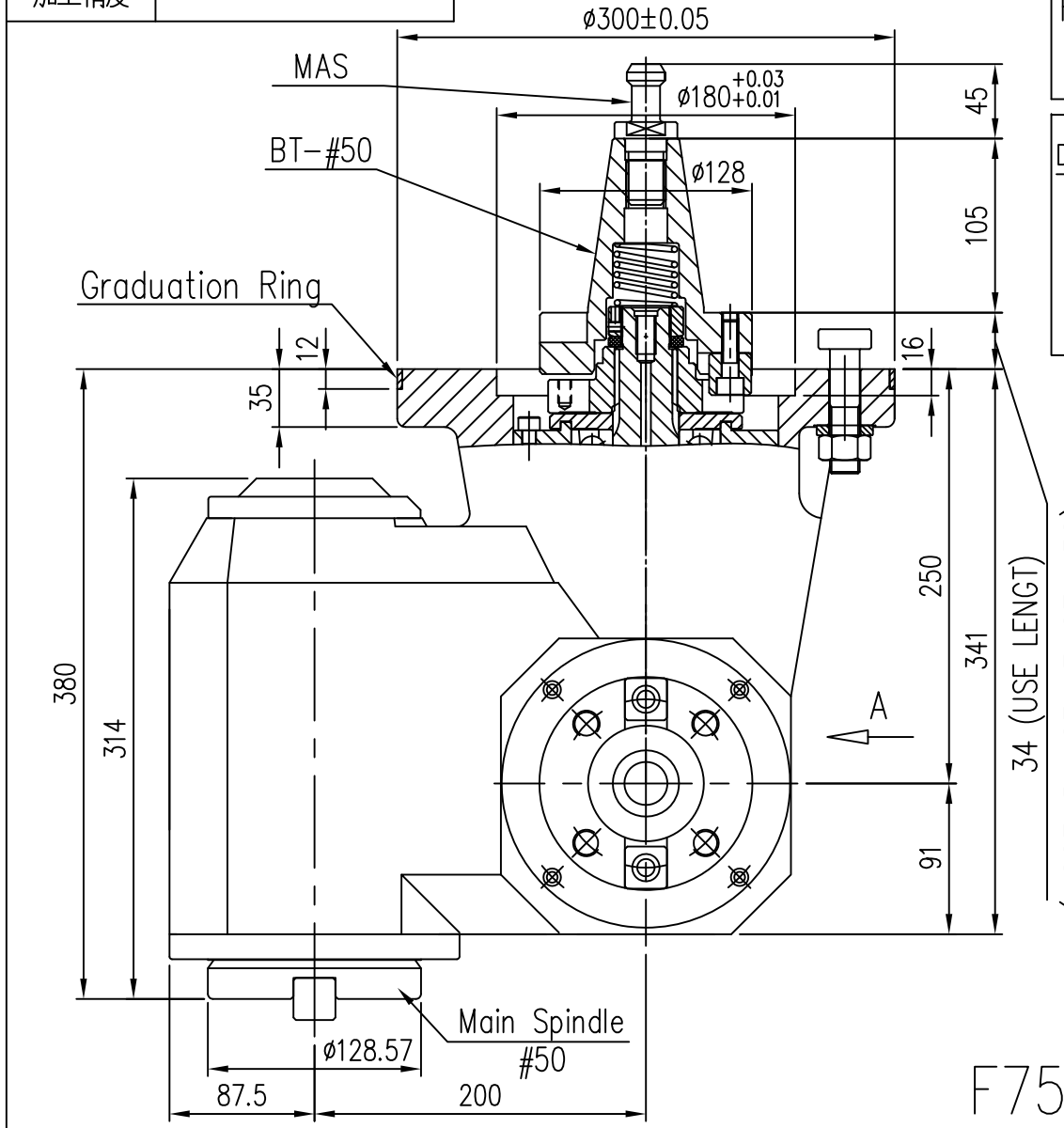

Pull Rod Select	
	BT(M24X3.0)
	NT(M24X3.0)
	NT(1")

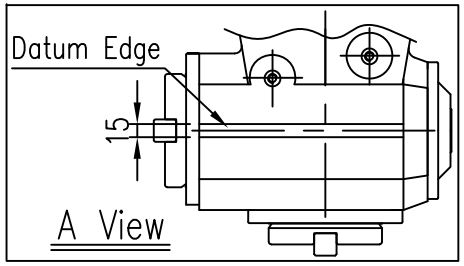

Max Cutter Dia	ø150(6")
Reduction Ratio	1 : 1
Max Torque	1200N.m
Max Power	38kw
Max Revolving	2000rpm
Main Spindle Steering	Right Turn

Accessories: "T"-Screw M18XP2.5X87LX6
Pull Rod Bed X1

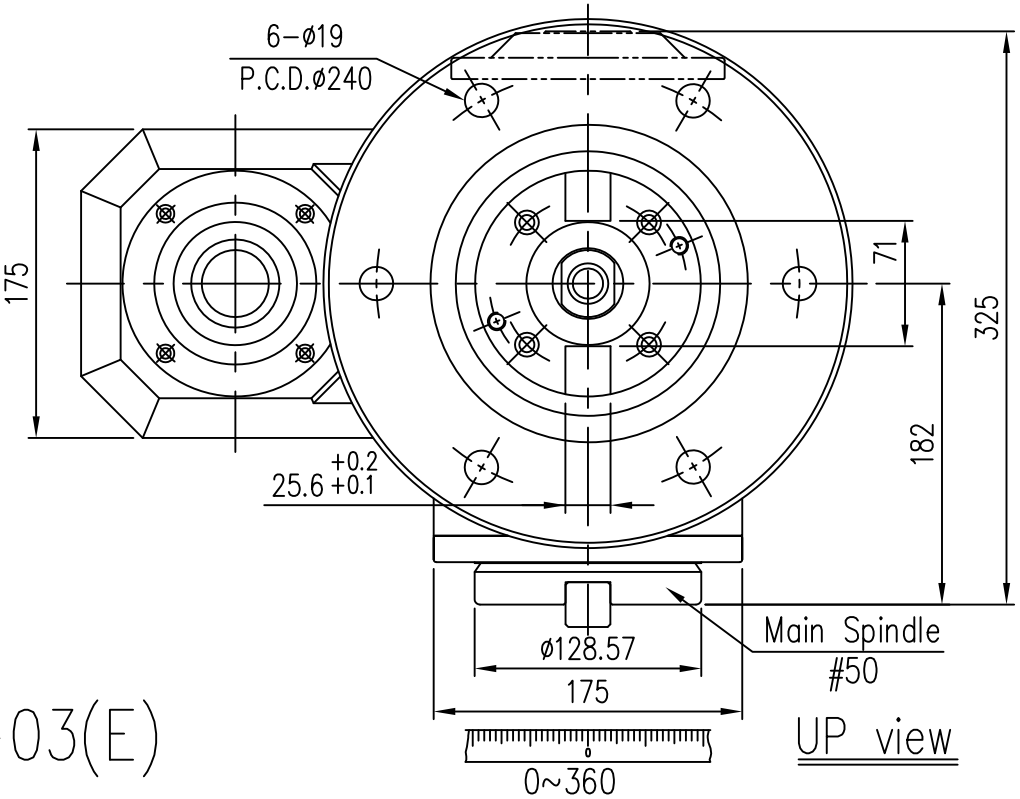

F75-03(E)