加工精度	

Pull Stud Select		
		BT(M24X3.0)
		NT(M24X3.0)
		NT(1”)

Max Cutter Dia	ø150(6”)
Reduction Ratio	1 : 1
Max Torque	1000 N.m
Max Power	38kw
Max Revolving	2000rpm
Main Spindle Steering	Right Turn
Accessories :Hexagon screw M12X40LX8	

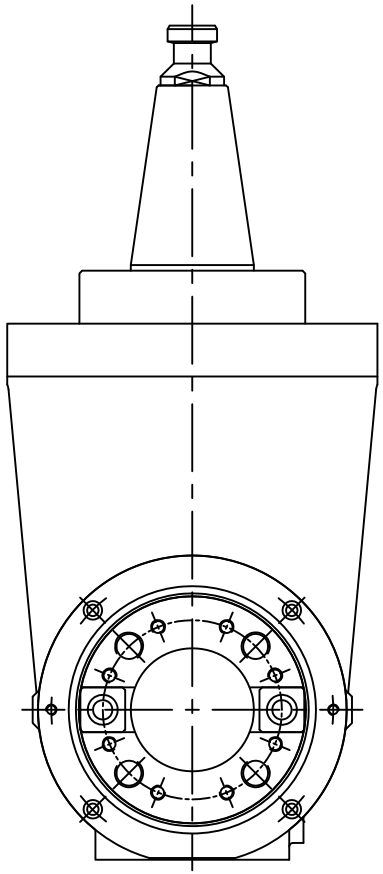

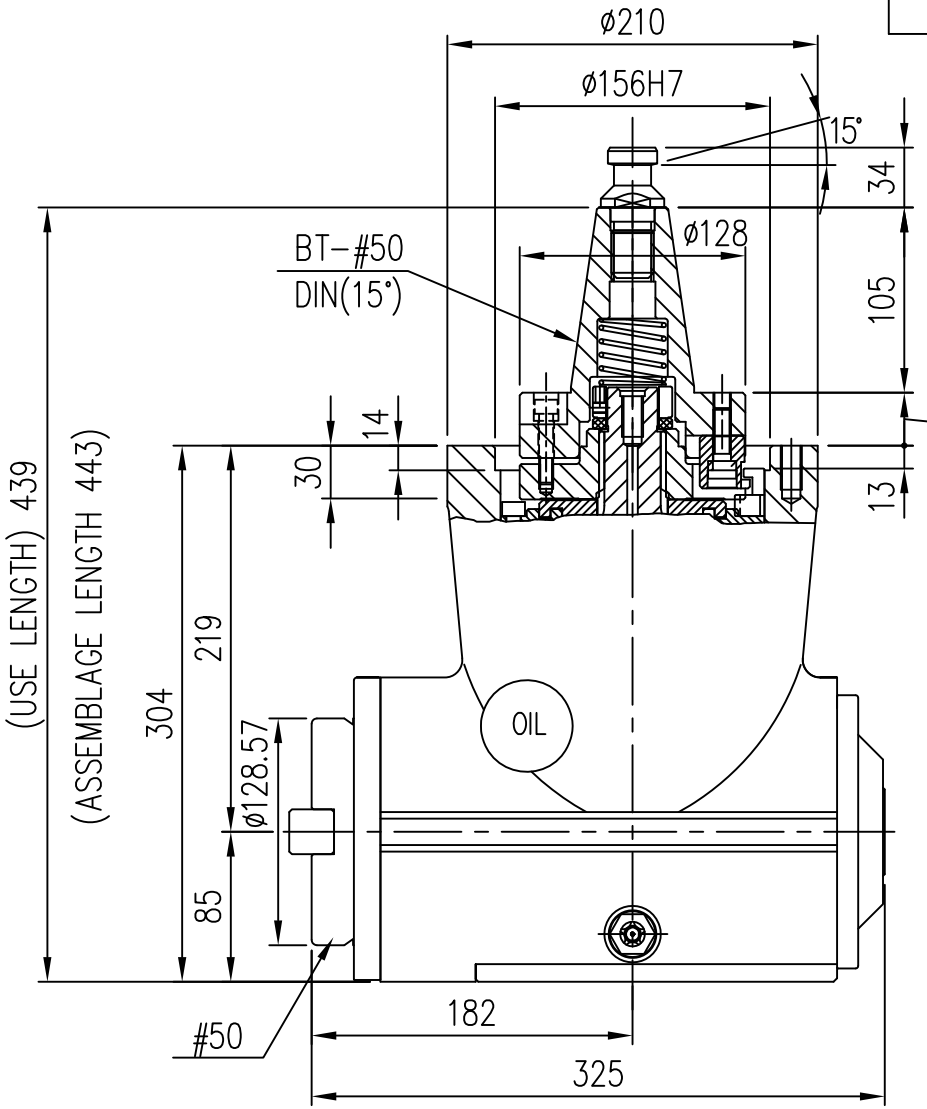

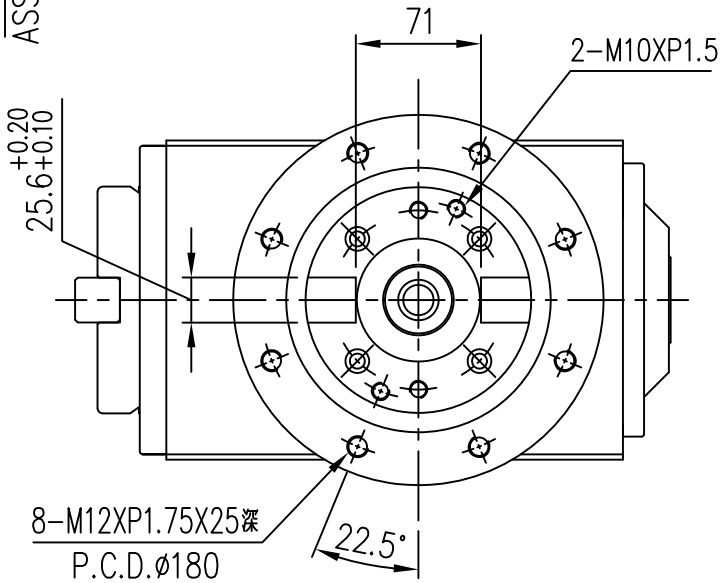

N75-W01(E)