加工精度	

E75N-06(E)

Pull Stud Select		
		BT(M24X3.0)
		NT(M24X3.0)
		NT(1")

Accessories : T-Screws X6
M18XP2.5X87L
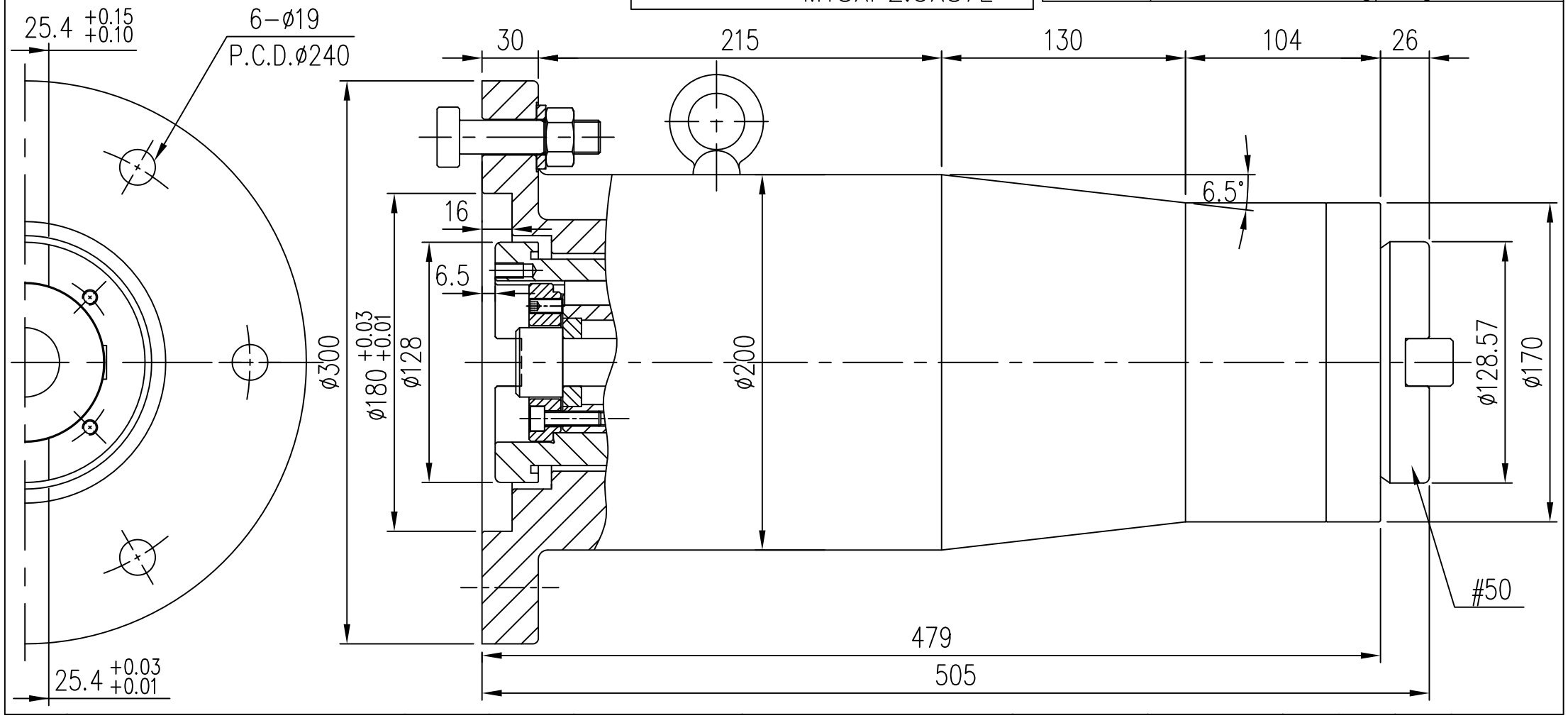
Max Cutter Dia	ø150(6")
Max Torque	1200 N.m
Max Power	38kw
Max Revolving	2000rpm
Main Spindle Steering	Right Turn